ALMEC MECHATRONICS

ALNWR.J	REMOTE CONTROL WITH JOYSTICK

- Pushbutton designed for **remote control applications** of machines equipped with RDC EVO radio receiver
- Miniaturized **2-axis joysticks** in hall technology
- **10 keys** keypad with a backlight and integrated spotlight led
- **Quick charging** for long battery life
- Emergency button
- Hamming security code for continuous work without interruptions on **434 or 868 MHz band**
- **Predictive maintenance** of the battery operations

TECHNICAL DATA	
MASTER CODE	ALNWR.J
POWER SUPPLY	3.7V 1200 mAh Li-ion INTEGRATED BATTERY CHARGING TIME: < 2h
BUTTONS	N. 10 FRONTAL KEYS (WITH *HIGH POWER* INTEGRATED BACKLIGHT AND SPOTLIGHT) UP TO 2 LEFT SIDE BUTTONS (OPTIONAL) UP TO 1 RIGHT SIDE BUTTON (OPTIONAL) N. 1 EMERGENCY STOP BUTTON
JOYSTICK	OPERATION FORCE 1.5 N ±0.5 N DEFLECTION ANGLE ± 22.5° each direction CENTERING SPRING RETURN LIFETIME 5 Mio. cycles Round, guided feel · Round, no guided feel · Cross gate
LED	N. 16 PROGRAMMABLE SPOTLIGHT LEDS (PUSHBUTTONS INTEGRATED) N.3 STATUS LED (GREEN & RED BICOLOR) BATTERY STATUS LED CHARGING LED (Red: in charge – green: charging complete)
RADIO FEATURES	NOMINAL FREQUENCY: 868 MHz / 433.92 MHz MULTI-CHANNEL WITH AUTOMATIC FREQUENCY SCAN ANTENNA: INTEGRATED OPERATIVE RANGE: 100m *
RADIO PROTOCOL	PACKET TRANSMISISON PROTOCOL BIDIRECTIONAL LINK
CHARGER CONNECTOR	Universal USB TYPE-C (5 V max 1 A)
TEMPERATURE	OPERATING: -20 … +60°C CHARGING: 0 … +45°C STORAGE: -20 … +80°C (10 days)

Scan me

*Cautionary value verified in our laboratories under typical operating conditions

ALMEC S.p.A. (a socio unico) - Via Torino 196 - 12063 - Dogliani (Cn) - Tel. +39 0173 742821 - www.almec.net - info@almec.net

We reserve the right to make technical alterations without prior notice

ELECTRONIC FEATURES

APPROVALS	CE (RED) UKCA
Health and safety - Article 3.1(a)	EN 62479:2010 EN 50663:2017
Electromagnetic compatibility - Article 3.1(b)	ETSI EN 301 489-1 v.3.2.1 (2021/11) ETSI EN 301 489-3 v.2.1.1 (2017/03)
Efficient use of radio spectrum - Article 3.2	ETSI EN 300 220-1 v.3.1.1 (2017/02) ETSI EN 300 220-2 v3.2.1 (2018/06)
ENVIRONMENTAL TESTING	IEC 60068-2-64 IEC 60068-2-27 IEC 60068-2-27 IEC 60068-2-30
PROTECTION	IEC 60529 (IP63)

SIZE (mm)

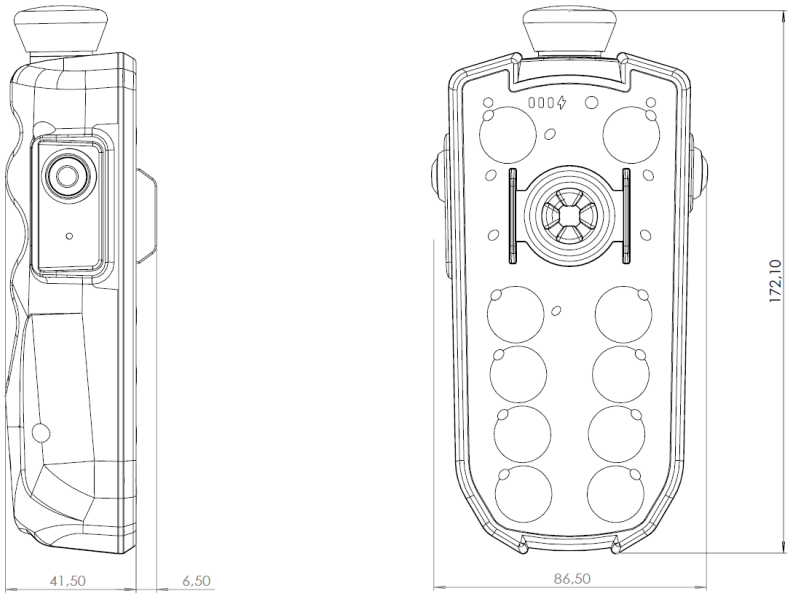

FEATURES

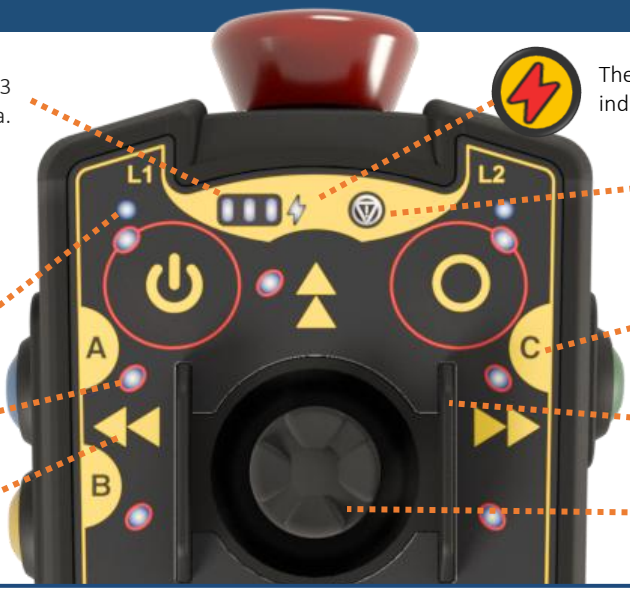

Device battery charge is available by the 3 color LED display located in the front area.

The status of the battery in charge is indicated by the dedicated bicolor led

PUSHBUTTON STATUS LED
emergency stop button feedback

BICOLOR STATUS LED
Custom application use

CUSTOMIZABLE GRAPHIC
Pictograms, colors and company logo

SPOTLIGHT LED
Integrated on each key

LOW PROFILE GUARD
To avoid accidental operations

BACKLIGHT
Integrated on each key and logo area

RUBBER HANDLE
For a better user grip

ALMEC S.p.A. (a socio unico) - Via Torino 196 - 12063 - Dogliani (Cn) - Tel. +39 0173 742821 - www.almec.net - info@almec.net

We reserve the right to make technical alterations without prior notice

ALNWR.J

REMOTE CONTROL WITH JOYSTICK

FEATURES

MOUNTING BRACKET

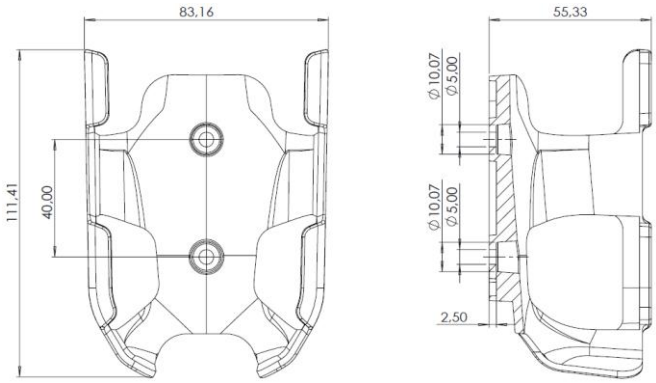

CUSTOMIZABLE KEYBOARD GRAPHIC

OPTIONAL

USB TYPE-C (5 VDC) BATTERY CHARGER
with USB-C – USB-C cable included
For universal USB charger

OPTIONAL:
- 220/230 VAC plug adapter
- 12 VDC Lighter socket charger

USB TYPE-C connector

Compatible with universal smartphone / tablet / power-bank charger

PREDICTIVE MAINTENANCE: YOUR EFFICIENCY, ALWAYS UNDER CONTROL
Thanks to our intelligent monitoring system, we can anticipate potential maintenance needs before they become issues. Contact ALMEC to discover how predictive maintenance can boost operational continuity and reduce downtime.

RADIO KIT READY TO USE
RDC EVO

- Bi-directional radio module for remote machinery control equipped with a CANbus network
- Designed to operate in systems with high safety level architectures
- Compatible with SIL2 and PLd standards.
- Integrated adjustable antenna
- Rugged IP68 enclosure and connector

See the dedicated datasheet on almec.net

ALNWR
RADIO TRANSMITTER

RDC EVO
RADIO RECEIVER

NOTE