ALMEC MECHATRONICS

TRS.ETMB	THREEAXIAL ANGULAR SAFETY SENSOR

- Double CPU and a double 3D MEMS accelerometer, in a fully redundant circuit scheme, with a safety-based relay output switch
- Logic output software configurable
- Differentiates the X-, X+, Y-, Y+ axes as well as to get separate offset
- Implementable as a SLAVE in a CAN network
- Polyurethane resin case

CE

TECHNICAL FEATURES		
MASTER CODE		TRS.ETMB
POWER SUPPLY		9-36 VDC / CURRENT CONSUMPTION 30 mA AT 24 VDC (STAND BY MODE)
OUTPUT		2 SAFETY RELAY DIGITAL ON/OFF TRIGGER OUTPUT REDUNDANT OUTPUT CIRCUIT SCHEME OUTPUT CURRENT: MAX 2 A 4 INDEPENDENT THRESHOLD ANGLES SETUP (X-, X+, Y-, Y+) THRESHOLD PROFILE WINDOW: RECTANGULAR OR TOROIDAL
CAN BUS	**1 PORT**	2.0B COMPLIANT - (11, 29 BIT) - ISO 11898 - UP TO 1MBIT/S
CAN BUS PROTOCOLS		CAN OPEN (CIA DS410 DEVICE PROFILE FOR INCLINOMETER, WITH DS306 COMPLIANT EDS FILE)
LED		NR.1 STATUS LED
MEASURE OPTIONS		TILT / ANGLE
TECHNOLOGY		3D MEMS ACCELEROMETER
SAFETY		DOUBLE CPU AND DOUBLE SENSOR
CONNECTION PORT	**1**	0,60 m CABLE TPE 0,50 m CABLE PUR WITH 8 POLES DEUTSCH CONNECTOR
CASE		ENCAPSULATED IN PUR RESIN - SELF-EXTINGUISHING UL94 (V0)
WORKING TEMPERATURE		-40°C +80°C

Scan me

ALMEC S.p.A. (a socio unico) - Via Torino 196 - 12063 - Dogliani (Cn) - Tel. +39 0173 742821 - www.almec.net - info@almec.net

We reserve the right to make technical alterations without prior notice

CIA member

TRS.ETMB — THREEAXIAL ANGULAR SAFETY SENSOR

MEASURE FEATURES	
OPTIONS	ANGLE – TILT
FILTERING	USER CONFIGURABLE
RESOLUTION	UP TO 0,01°
REDUNDANCY DIFFERENCE MEASURE	LESS THAN 1°

ELECTRONIC FEATURES	
SLAVE USAGE	EDS FILE
PROGRAMMING	FIRMWARE UPLOAD BY CAN BUS WITH ALOADER SOFTWARE TOOL
CONFIGURING	THROUGH ALTILT CONFIG
CPU	DOUBLE 16 bit MICROCONTROLLER CORE
SAMPLE TIME	LESS THAN 5 ms

STANDARDS	
ELECTROMAGNETIC EMISSIONS	EN 61000-6-4// EN 55011 (RF RADIATE)
ELECTROMAGNETIC IMMUNITY	EN 61000-6-2// EN 61000-4-2/3/4/6
IP	BOX: IP68
MTTFd	96,86 YEARS CALCULATED ACCORDING TO THE IEC61709 (SIEMENS SN29500), WITH ENVIRONMENTAL FACTORS 3K7 (IEC60721) RATED RELAY CYCLES: 20000/YEAR
PERFORMANCE AND SAFETY INTEGRITY LEVEL	PLd – SIL2 (DUAL-CHANNEL INTERNAL SCHEME)

IN ACCORDANCE WITH THE EN50498 THE DEVICE MEETS THE TECHNICAL SPECIFIC REQUIREMENTS OF 2004-104 DIRECTIVE (AUTOMOTIVE). THE DEVICE IS EMC 2004/108 COMPLIANT.

SIZE (mm)

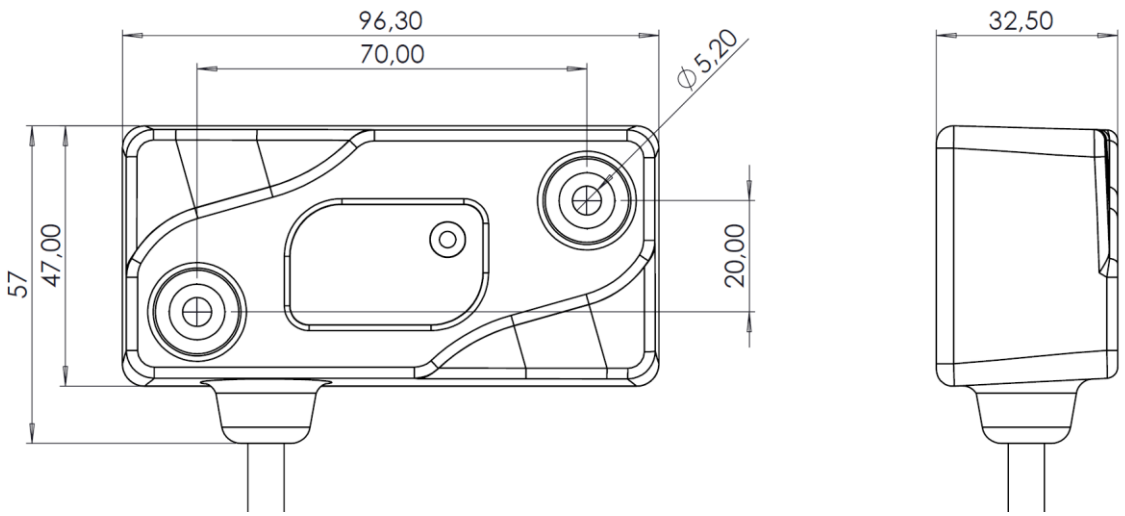

ALMEC S.p.A. (a socio unico) - Via Torino 196 - 12063 - Dogliani (Cn) - Tel. +39 0173 742821 - www.almec.net - info@almec.net
We reserve the right to make technical alterations without prior notice

CONNECTION OPTIONS

CABLE: PUR , 0,50m LENGTH

CONNECTOR: DEUTSCH DT04-8P

1	BN	POSITIVE POWER SUPPLY
2	WH	GND POWER SUPPLY
3	YE	CAN L
4	OR	CAN H
5	BU	OUTPUT R3
6	BK	OUTPUT R2
7	VT	ZERO
8	GY	POSITIVE COMMON POWER SUPPLY R1

CABLE: TPE , 0,60m LENGHT

***TWISTED WIRES ON COLOUR COUPLES**

CONNECTOR: n.a.

*	BN	POSITIVE POWER SUPPLY
	WH	GND POWER SUPPLY
*	YE	CAN L
	GN	CAN H
*	BU	OUTPUT R3
	RD	OUTPUT R2
*	PK	ZERO
	GY	POSITIVE COMMON POWER SUPPLY R1

OUTPUT FEATURES

OUTPUT CIRCUIT SCHEME

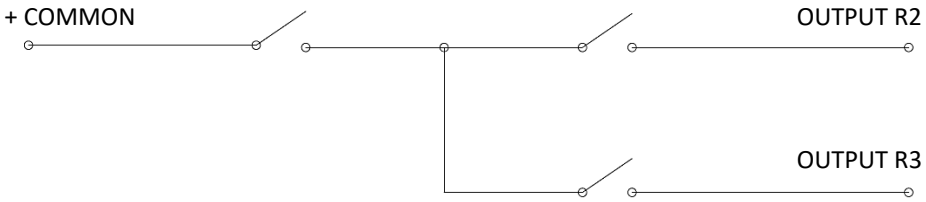

MEASURE OPTIONS

S00	S01	S04
TRASDUCER WITH FULLY CONFIGURABLE ANGLE MEASUREMENT MODE AND FILTERS SETUP	TRASDUCER WITH ANGLE MEASUREMENT MODE ONLY ON Z AXIS (ANGLE MEASUREMENT)	TRASDUCER WITH ANGLE MEASUREMENT MODE ON X &Y AXIS (TILT MEASUREMENT)
	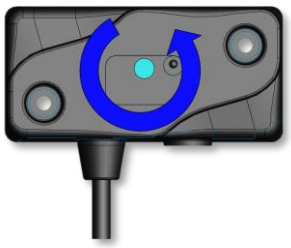	

ALMEC S.p.A. (a socio unico) - Via Torino 196 - 12063 - Dogliani (Cn) - Tel. +39 0173 742821 - www.almec.net - info@almec.net

We reserve the right to make technical alterations without prior notice

CIA member

NOTE